H4 Edge Solution (ES) Outdoor Dome Camera Line

The H4 Edge Solution Camera line combines high-definition imaging, self-learning video analytics, network video recorder functionality, and embedded Avigilon Control Center™ video management software to create an all-in-one intelligent surveillance solution.





Onboard Solid-State Drive (SSD) storage

The H4 Edge Solution Camera records video directly to an onboard solid-state drive, eliminates the need for a separate network video recorder, and reduces installation and system costs.

Avigilon Control Center (ACC Software) Built-in

The H4 Edge Solution Camera line provides unique flexibility and versatility, with deployment options ranging from standalone installation, multi-camera solutions, to seamless integration into a conventional network video surveillance system.

As an Internet of Things device, the solution acts as both a camera and out-of-the-box video management software platform, providing a uniquely easy-to-install and cost-effective surveillance solution.

KEY FEATURES

- 1-3 megapixel models
- Factory installed and licensed with ACC Video Management software running on the camera
- Up to 256 GB on-board Solid-State Drive (SSD)
- Up to 30 day of video retention
- Self-learning video analytics
- Patented Advanced Video Pattern Detection and Teach by Example Technology
- Patented High Definition Stream Management (HDSM)™ Technology maintains image quality while reducing bandwidth
- Idle Scene Mode lowers the bandwidth and storage usage if there are no motion events detected in the scene
- Wifi camera configuration support
- Zoom and content adaptive integrated IR (Infrared) LEDs provide uniform illumination in the dark, even at 0 lux, up to a maximum of 30 m (98 ft) away
- Avigilon LightCatcher™ technology provides exceptional image quality in low light environments
- Triple Exposure Ultra Wide Dynamic Range
- Factory pre-configured image preset modes for maximum image performance in a variety of lighting conditions

Specifications

		1.0 MP	2.0 MP	3.0 MP
IMAGE PERFORMANCE	Image Sensor	1/2.8" progressive scan CMOS		
	Aspect Ratio	16:9		4:3
	Active Pixels (H x V)	1280 x 720	1920 x 1080	2048 x 1536
	Imaging Area (H x V)	4.8 mm x 2.7mm; 0.189" x 0.106"		5.12 mm x 3.84 mm; 0.202" x 0.151"
	IR Illumination Option (high power 850 nm LEDs)	30 m (98 ft) max. distance at 0 lux		
	Minimum Illumination	0.04 lux (F1.3) in color mode; 0.008 lux (F1.3) in monochrome mode		
	Image Rate – High Framerate	30 fps	30 fps	30 fps
	Image Rate – Full Feature		12 fps	12 fps
	Dynamic Range	67 dB		
	Dynamic Range (WDR enabled)	120 dB triple exposure (20 fps or less); 100 dB dual exposure (30 fps)	120 dB triple exposure (Full Feature Mode). WDR is disabled in High Framerate Mode	
	Resolution Scaling	Down to 768 x 432		
	Camera Operating Mode	N/A	High Framerate = Camera will prioritize maximum image rate over other features. WDR is disabled.	
			Full Feature = Camera will prioritize feature capabilities over image rate.	
	3D Noise Reduction Filter	YES		
ONBOARD STORAGE	Solid-State Drive (SSD)	128 G	256 G	256 G
	Retention Rate	Up to 30 days (2 Mbps stream based on 30% motion duty cycle)		
LENS	Lens	3 - 9 mm F1.3, P-Iris, remote focus and zoom		
	Angle of View	30° – 91°		32° – 98°
IMAGE CONTROL	Image Compression Method	H.264 (MPEG-4 Part 10/AVC), Motion JPEG, HDSM SmartCodec Technology		
	Streaming	Multi-stream H.264 and Motion JPEG		
	Bandwidth Management	HDSM		
	Motion Detection	Pixel and classified objects		
	Camera Tampering Detection	Yes		
	Electronic Shutter Control	Automatic, Manual (1/6 to 1/8000 sec)		
	Iris Control	Automatic, Manual		
	Day/Night Control	Automatic, Manual		
	Flicker Control	50 Hz, 60 Hz		
	White Balance	Automatic, Manual		
	Backlight Compensation	Adjustable		
	Privacy Zones	Up to 64 zones		
	Audio Compression Method	G.711 PCM 8 kHz		
	Audio Input/Output	Line level input and output, A/V mini-jack (3.5 mm)		
	Video Output	(1.0 - 2.0 MP only) NTSC/PAL, A/V mini-jack (3.5 mm)		
	External I/O Terminals	Alarm In, Alarm Out		
	USB Port	USB 2.0		
NETWORK	Network	100BASE-TX		
	Cabling Type	CAT5		
	Connector	RJ-45		
	ONVIF	ONVIF compliant with version 1.02, 2.00, Profile S and 2.2.0 of the Analytics Service Specification (*bounding boxes and scene descriptions not available with third-party VMS)		
	Security	Password protection, HTTPS encryption, digest authentication, WS authentication, user access log, 802.1x port based authentication		
	Protocol	IPv6, IPv4, HTTP, HTTPS, SOAP, DNS, NTP, RTSP, RTCP, RTP, TCP,UDP, IGMP, ICMP, DHCP, Zeroconf, ARP		
	Streaming Protocols	RTP/UDP, RTP/UDP multicast, RTP/RTSP/TCP, RTP/RTSP/HTTP/TCP, RTP/RTSP/HTTPS/TCP, HTTP		
	Device Management Protocols	SNMP v2c, SNMP v3		

		PENDANT DOME CAMERA		SURFACE MOUNT OUTDOOR DOME CAMERA
MECHANICAL	Dimensions (LxWxH)	dome camera only:	172 mm x 172 mm x 124 mm; (6.8" x 6.8" x 4.9")	163 mm x 163 mm x 121 mm; (6.4" x 6.4" x 4.8")
		with wall mount (H4-MT-WALL1):	275 mm x 172 mm x 152.1 mm (10.8" x 6.8" x 6.0")	
		with NPT mount (H4-MT-NPTA1):	172 mm x 172 mm x 172.3 mm (6.8" x 6.8" x 6.8")	
	Weight	dome camera only:	1.55 kg (3.42 lbs)	1.35 kg (2.97 lbs)
		with wall mount (H4-MT-WALL1):	3.00 kg (6.62 lbs)	
		with NPT mount (H4-MT-NPTA1):	1.80 kg (3.98 lbs)	
	Dome Bubble	Polycarbonate, clear		
	Body	Aluminum		
	Housing	Pendant mount, vandal resistant - with wall mount (H4-MT-WALL1) / NPT mount (H4-MT-NPTA1)		Surface mount, vandal resistant
	Finish	Powder coat, RAL 9003		
	Adjustment Range	360° pan, 9° – 95° tilt (30° – 95° with -IR option), ±180° azimuth		

ELECTRICAL	Power Consumption	9 W								
	Power Source	VDC: 12 V +/- 10%, 9 W min		VAC: 24 V +/- 10%, 13 VA min		PoE: IEEE802.3af Class 3 compliant				
	Power Connector	2-pin terminal block								
	RTC Backup Battery	3V manganese lithium								
ENVIRONMENTAL	Operating Temperature	-40 °C to +60 °C (-40 °F to 140 °F)								
	Storage Temperature	-10 °C to +70 °C (14 °F to 158 °F)								
	Humidity	0 - 95% non-condensing								
CERTIFICATIONS	Certifications/Directives	UL	cUL	CE	ROHS	WEEE	RCM	EAC	KC	BIS
	Safety	UL 60950-1		CSA 60950-1		IEC 60950-1	IEC 62471 (for -IR options only)			
	Environmental	UL/CSA/IEC 60950-22		IEC 60529 IP66 Rating		IK10 Impact Rating				
	Electromagnetic Emissions	FCC Part 15 Subpart B Class B		IC ICES-003 Class B		EN 55032 Class B	EN 61000-6-3	EN 61000-3-2	EN 61000-3-3	EN 55011
	Electromagnetic Immunity	EN 55024				EN 61000-6-1				

SUPPORTED RULE BASED VIDEO ANALYTICS EVENTS

Objects in Area	The event is triggered when the selected object type moves into the region of interest.
Object Loitering	The event is triggered when the selected object type stays within the region of interest for an extended amount of time.
Objects Crossing Beam	The event is triggered when the specified number of objects have crossed the directional beam that is configured over the camera's field of view. The beam can be unidirectional or bidirectional.
Object Appears or Enters Area	The event is triggered by each object that enters the region of interest. This event can be used to count objects.
Object Not Present in Area	The event is triggered when no objects are present in the region of interest.
Objects Enter Area	The event is triggered when the specified number of objects have entered the region of interest.
Objects Leave Area	The event is triggered when the specified number of objects have left the region of interest.
Object Stops in Area	The event is triggered when an object in a region of interest stops moving for the specified threshold time.
Direction Violated	The event is triggered when an object moves in the prohibited direction of travel.
Tamper Detection	The event is triggered when the scene unexpectedly changes.

SUPPORTED ACC FEATURES

System	• 1 camera per server (connection to self) • 2 simultaneous client connections (override supported) • Site supports up to 200 cameras and a total of 100 defined users. H4 ES Cameras can be part of a site with 15 other H4 ES Cameras, ACC ES HD Recorders, or ACC servers
Recording Rate	12 Mbps
Stream Out Rate	24 Mbps
Client	• Saved Views • Maps • Web pages • Editable Site View • Intelligent Virtual Matrix • Collaborative investigations
Recording, Searching and Playback	• Hourly configurable recording schedule • Intelligent motion search • Live export • Video archiving • Thumbnail search • Event search • Alarm search
Integrations	All 3rd party integrations via the ACC SDK Plus: • CommScope iPatch • RS2 AccessIt! • DDS Amadeus 5 • DSX
Additional Features	• Email event notification • Digital input email trigger • Manual digital output trigger • Audio recording and talkdown • Unlimited rule triggers • Failover connections • Alarm escalation • *Redundant recording *Depending on level of site activity (site, camera, analytics, etc), redundant recording to a secondary server may exhibit a degradation in performance.

Outline Dimensions

Pendant Dome Camera

WITH WALL MOUNT (H4A-MT-WALL1)

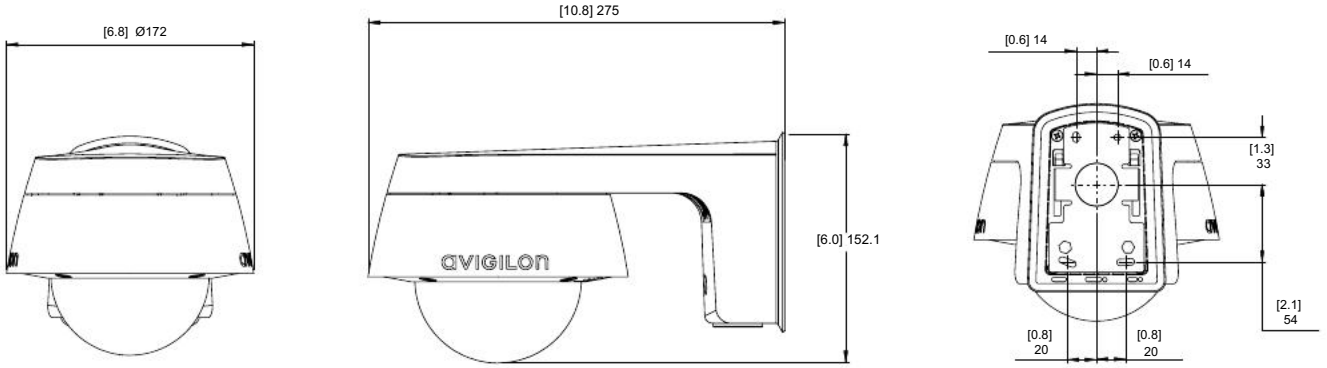

WITH NPT MOUNT (H4A-MT-NPTA1)

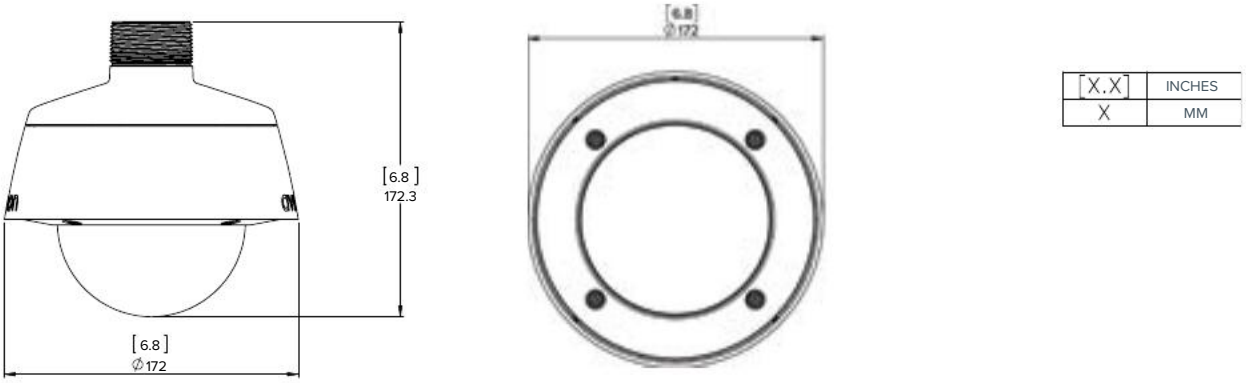

[X.X]	INCHES
X	MM

Surface Mount Outdoor Dome Camera

(H4A-DO)

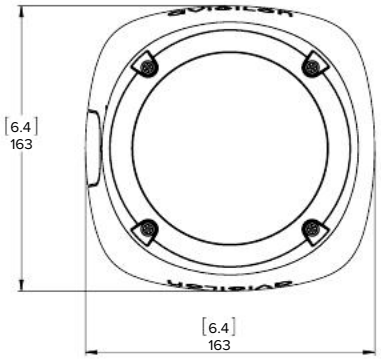

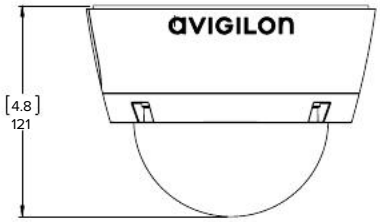

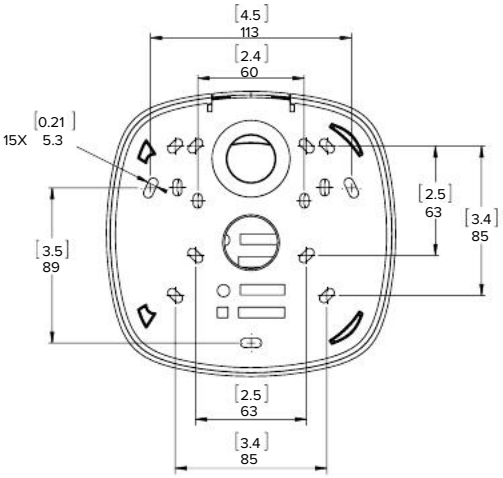

Ordering Information

PENDANT DOME CAMERAS	MP	WDR	LIGHTCATCHER	ANALYTICS	STORAGE	LENS	IR	HDSM SMARTCODEC
1.0C-H4A-12G-DP1-IR(-B)*	1.0	✓	✓	✓	128 G	3 - 9 mm	✓	✓
2.0C-H4A-25G-DP1-IR(-B)*	2.0	✓	✓	✓	256 G	3 - 9 mm	✓	✓
3.0C-H4A-25G-DP1-IR(-B)*	3.0	✓	✓	✓	256 G	3 - 9 mm	✓	✓

* These models are physically identical. (-B)* depicts an updated hardware version.

H4A-MT-WALL1	Indoor/Outdoor Pendant Wall Arm Mount
H4A-MT-NPTA1	Indoor/Outdoor Pendant NPT Mount
H4A-DP-SMOK1	Dome Camera Cover with Smoked Bubble
H4A-DP-CLER1	Dome Camera Cover with Clear Bubble
H4-MT-POLE1	Aluminum pole mounting bracket for H4 HD Pendant Dome Cameras and H4 HD Bullet Cameras
H4-MT-CRNR1	Aluminum corner mounting bracket for H4 HD Pendant Dome Cameras and H4 HD Bullet Cameras
H4A-AC-GROM1	Camera Sealing Grommet, Pack of 10
H4-AC-WIFI2-NA	USB Wifi Adapter
H4-AC-WIFI2-EU	USB Wifi Adapter
CM-AC-AVIO1	3.5 mm Jack with 1.8 m Fly Wires
CM-AC-GROM1	Pipe Grommet, Pack of 10

SURFACE MOUNT OUTDOOR DOME CAMERAS	MP	WDR	LIGHTCATCHER	ANALYTICS	STORAGE	LENS	IR	HDSM SMARTCODEC
1.0C-H4A-12G-DO1-IR(-B)*	1.0	✓	✓	✓	128 G	3 - 9 mm	✓	✓
2.0C-H4A-25G-DO1-IR(-B)*	2.0	✓	✓	✓	256 G	3 - 9 mm	✓	✓
3.0C-H4A-25G-DO1-IR(-B)*	3.0	✓	✓	✓	256 G	3 - 9 mm	✓	✓

* These models are physically identical. (-B)* depicts an updated hardware version.

H4A-DO-SMOK1	Outdoor Dome Camera Cover with Smoked Bubble
H4A-DO-CLER1	Outdoor Dome Camera Cover with Clear Bubble
H4-AC-WIFI2-NA	USB Wifi Adapter
H4-AC-WIFI2-EU	USB Wifi Adapter
H4A-AC-GROM1	Camera Sealing Grommet, Pack of 10
CM-AC-AVIO1	3.5 mm Jack with 1.8 m Fly Wires
CM-AC-GROM1	Pipe Grommet, Pack of 10

TecniTrán Telecomunicaciones
Tel. Madrid: 916 106 678 www.tecnitran.es
Tel. Valencia: 960 699 593 info@tecnitran.es
Síguenos en:

© 2020, Avigilon Corporation. All rights reserved. AVIGILON, the AVIGILON logo and TRUSTED SECURITY SOLUTIONS are trademarks of Avigilon Corporation. Other names or logos mentioned may be the trademarks of their respective owners. The absence of the symbols ™ and ® in proximity to each trademark in this document or at all is not a disclaimer of ownership of the related trademark. Avigilon Corporation protects its innovations with patents issued in the United States of America and other jurisdictions worldwide (see www.avigilon.com/patents). Unless stated explicitly and in writing, no license is granted with respect to any copyright, industrial design, trademark, patent or other intellectual property rights of Avigilon Corporation or its licensors.