DS-K1T671TM-3XF
Face Recognition Terminal



DS-K1T671TM-3XF face recognition terminal is a kind of access control device integrated with fever screening function. It can fast taking body temperature and upload abnormal temperature event to the center, which can be widely applied in multiple scenarios, such as enterprises, stations, dwellings, factories, schools, campus and so on.

Available Model

DS-K1T671TM-3XF

Features

- Supports Vanadium Oxide uncooled sensor to measure target's temperature
- Temperature measuring range: 30 °C to 45 °C (86 °F to 113 °F), accuracy: ± 0.5 °C without black body calibration
- Recognition distance: 0.3 to 2 m
- Fast temperature measurement mode: Detects face and takes body temperature without identity authentication.
- Multiple authentication modes are available: card and temperature, face and temperature, card and face and temperature, etc.
- Face mask wearing alert
  If the recognizing face does not wear a mask, the device will prompt a voice reminder. At the same time, the authentication or attendance is valid.
- Forced mask wearing alert
  If the recognizing face does not wear a mask, the device will prompt a voice reminder. At the same time, the authentication or attendance will be failed.
- Displays temperature measurement results on the authentication page
- Triggers voice prompt when detecting fever
- Configurable door status (open/close) when detecting fever
- Transmits online and offline temperature information to the client software via TCP/IP communication and saves the data on the client software
- Face recognition duration ＜ 0.2 s/User; face recognition accuracy rate ≥ 99%
- 50,000 face capacity, 50,000 card capacity, and 100,000 event capacity

- Suggested height for face recognition: between 1.4 m and 1.9 m
- Supports 6 attendance status, including check in, check out, break in, break out, overtime in, overtime out
- Watchdog design and tamper function
- Audio prompt for authentication result
- NTP, manually time synchronization, and auto synchronization
- Connects to external access controller or Wiegand card reader via Wiegand protocol
- Connects to secure door control unit via RS-485 protocol to avoid the door opening when the terminal is destroyed
- Imports and export data to the device from the client software

* ***Biometric recognition products are not 100% applicable to anti-spoofing environments. If you require a higher security level, use multiple authentication modes.***

Specifications

Model		DS-K1T671TM-3XF
Operation system		Linux
Temperature measurement	Sensor	Vanadium Oxide uncooled sensor
	Resolution	120 × 160
	Frame rate	25 fps
	Temperature range	30 °C to 45 °C (86 °F to 113 °F)
	Temperature accuracy	±0.5 °C, without black body calibration
	Measuring distance	0.3 to 2 m
Screen	Screen	7 inch touch screen
	Ratio	16:9
	Resolution	1024 × 600
Camera		2 MP dual-lens camera, WDR
Indicator		Support
Face	Recognition mode	Face: 1:1 and 1:N
	Face capacity	50,000
	Face recognition duration	＜ 0.2 s per person
	Face recognition distance	0.3 to 2 m
Card	Card capacity	50,000
	Card type	M1 card
	Card presenting duration	＜ 1 s
	Card presenting distance	0 to 5 cm
Event capacity		100,000
Interface		Network × 1, RS-485 × 1, Wiegand × 1, USB × 2, alarm output × 1, alarm input × 2, lock ×1, door contact × 1, exit button × 1, tamper × 1
Network		10/100/1000 Mbps self-adaptive
Wi-Fi		/
Tamper		Support

Model		DS-K1T671TM-3XF
Other	Working voltage	12 VDC/2 A
	Working temperature	0 °C to 50 °C (32 °F to 122 °F)
	Working humidity	10 to 90% (No condensing)
	Application	Indoor

** Exposing the equipment to direct sun light, low ventilation or heat source such as heater or radiator is forbidden (ignorance can cause fire danger).*

Dimensions

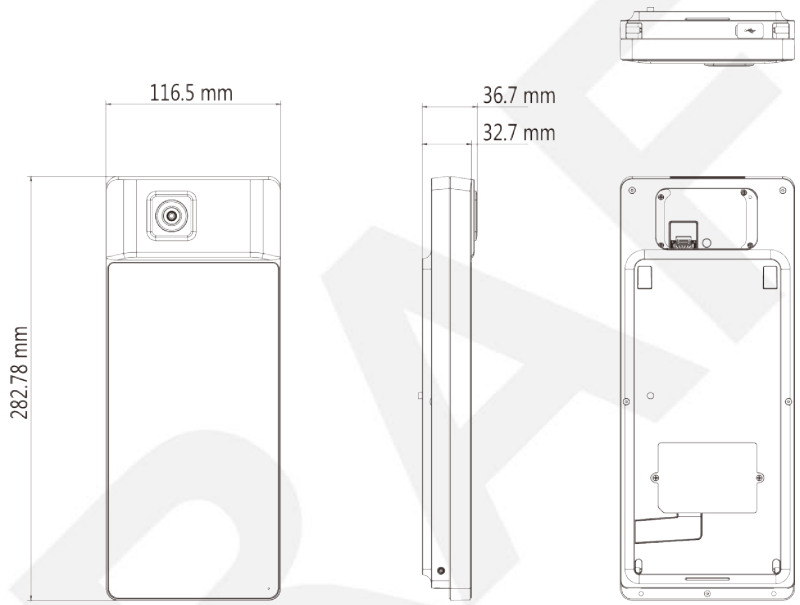

Distributed by

HIKVISION

Headquarters
No.555 Qianmo Road, Binjiang District,
Hangzhou 310051, China
T +86-571-8807-5998
overseasbusiness@hikvision.com

TecniTran
Telecomunicaciones
Tel. Madrid: 916 106 678 www.tecnitran.es
Tel. Valencia: 960 699 593 info@tecnitran.es
Síguenos en:

© Hikvision Digital Technology Co., Ltd. 2019 | Data subject to change without notice |