DAHUA-2191

Face Recognition Access Controller



- 2.5D curved screen
- 7 Inch LCD display with resolution of 1024×600
- 2 MP CMOS, WDR
- Auto fill light reduces light pollution
- Can hold 100,000 users, 100,000 face images, 100,000 cards, 100,000 password, 50 administrators, and 300,000 records
- Support face, IC card, password unlock and unlock through their combinations
- With face detection box; the largest face among faces that appear at the same time is recognized first; the maximum face size can be configured on the web
- Face-camera distance: 0.3 m–2.0 m; human height: 0.9 m–2.4 m (lens-ground distance: 1.4 m)
- With face recognition algorithm, the access controller can recognize more than 360 positions on human face
- Face recognition speed: 0.2 s per face
- Support liveness detection
- Accurate recognition in backlight and front light
- Various unlock status display modes protect user privacy

·Support enabling/disabling the thermometer; temperature measurement range is 30° Cto 45° C; temperature measurement distance range is 0.3 m–1.8 m; temperature measurement error is ±0.5° C; temperature measurement accuracy is 0.1° C; report temperature anomaly alarm

· Support mask detection, report alarm of abnormal events without wearing a mask

- Support duress alarm, tamper alarm, intrusion alarm, door contact timeout alarm, and illegal card exceeding threshold alarm
- Support general users, patrol users, VIP users, guest users, and special users

TechnicalSpecification

System

MainProcessor	EmbeddedProcessor
InternetProtocol	IPv4,RTSP,RTP,TCP,UDP,P2P
OSDPProtocol	Yes
Interoperability	ONVIF;CGI
SDKandAPI	SupportSDK

Basic

Display	7inchdisplay
ScreenType	CapacitiveScreen
Resolution	600(H)×1024(V)
Camera	1/2.8"2MPCMOShighdefinitionWDRdualcamera
WDR	120dB
LightCompensation	Autowhitelight AutoIRlight
StatusIndicator	1indicatorlight.Red:Error;Green:Normal;Blue:Working
VoicePrompt	Yes
HousingMaterial	Aluminiumalloy/temperedglass/PC

Function

UnlockMode	Card/Remote/Password/Face unlock and unlock Through their cmbinations Face unlock under temperature monitoring Mode
CardReadingType	ICcard
PeriodList	128
HolidayPeriod	128
First-CardUnlock	Yes
RemoteVerification	Yes

Peripheral Card Reader	1 RS-485, 1 Wiegand
Multiple Authentication	Yes
Real-Time Surveillance	Yes
Web Configuration	Yes

Performance

Card Reading Distance	3cm
Face Recognition Range	Face-camera distance: 0.3 m–2.0 m Human height: 0.9m–2.4 m
Face Verification Accuracy	≥99.5%
Face Recognition Time	0.2s
Temperature Measurement Range	30℃ to 45℃
Temperature Measurement Accuracy	0.1℃
Temperature Measurement Error	±0.5℃
Temperature Measurement Distance	30 cm–180 cm
Temperature Measurement Height	140 cm–185 cm (when temperature measurement distance is 50 cm) 135 cm–200 cm (when temperature measurement distance is 120 cm)

Capacity

User Capacity	100, 000
Face Image Capacity	100, 000
Card Capacity	100, 000
Password Capacity	100, 000
Record Capacity	300, 000 records

Port

RS-485	1
RS-232	1
Wiegand	1 (input or output)
USB	2 USB2.0 port
Ethernet	1 1000M Ethernet Port 1 10M/100M Ethernet Port
Alarm Input	2 (Switch quantity)
Alarm Output	2 (Relay)
Alarm Linkage	Yes
Exit Button	1
Door Status Detection	1
Lock Control	1

Alarm

Anti-Passback	Yes
Tamper	Yes
Duress	Yes
Door Sensor Timeout	Yes
Intrusion	Yes
Illegal Card Exceeding Threshold	Yes

General

Power Supply	Provided
Power Supply Mode	DC 12V 2A
Power Consumption	≤24W
Product Dimensions	312.5 mm × 129.0 mm × 36.7 mm (12.30" × 5.08" × 1.44")
Packaging Dimensions	Controller packging: 380 mm × 235 mm × 124 mm (14.96"× 9.25"× 4.88") Protective case: 494 mm × 402 mm × 275 mm (19.45" × 15.83" × 10.83")
Working Temperature	Thermometer disabled: –10° C to +55° C (+14° F to +131° F) Thermometer enabled: +15° C to +30° C (+59° F to +86° F)
Working Humidity	0%RH–90%RH (non-condensing)
Working Environment	Indoor
Gross Weight	2.2 kg (4.85 lb)
Installation	Wall mounted
Certifications	CE/FCC

Ordering Information

Type	Model	Description
Face Recognition Access Controller (indoor;temperature monitoring)	DAHUA-2191	7-inch Face Recognition Access Controller (indoor;temperature monitoring)

Dimensions (mm[inch])

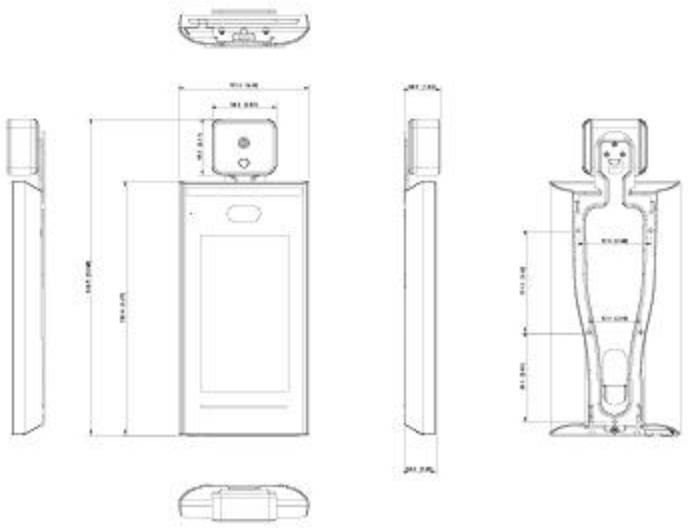

Application



TecniTran
Telecomunicaciones
Tel. Madrid: 916 106 678
Tel. Valencia: 960 699 593
www.tecnitran.es
info@tecnitran.es
Síguenos en:

© 2020 Dahua. All rights reserved. Design and specifications are subject to change without notice.
Pictures in the document are for reference only, and the actual product shall prevail.