DAHUA-2187

Thermal Network Bullet Camera



· 400 × 300 uncooled VOx thermal sensor technology
· Athermalized lens (thermal), focus-free
· Support body temperature measurement
· Measurement Accuracy: ±0.3°C, with blackbody
· Active deterrence with white light & siren
· Various lens optional (7.5/13 mm)
· 2/2 alarm in/out
· Micro SD memory, IP67, PoE,ePoE

System Overview

Featuring a fixed lens bullet camera, this series provides an all-in-one solution that is especially beneficial for body temperature measurement.

Functions

Uncooled VOx Technology
Dahua thermal cameras use uncooled VOx sensor technology. Their small size and better performance make them a cost-effective solution for thermal security.

High Sensitivity
High thermal sensitivity (<40 mK) allows cameras to capture more image details and temperature difference information.

Protection
The camera allows for wide input voltage tolerance, suitable for the most unstable conditions for outdoor applications. Its 6KV lightning rating provides effective protection for both the camera and its structure against lightning.

Body Temperature Measurement
Dahua thermal cameras characterized by non-contact, multi-objective, rapid, and no risk to temperature testers, etc. It can be conveniently deployed in public places with dense personnel, and can be used for efficient and safe preliminary screening of temperature anomalies.

Technical Specification

Thermal

Detector Type	Vanadium oxide uncooled focal plane detector
Effective Pixels	400 × 300
Pixel Pitch	17 μm
Spectral Range	8 μm–14 μm
Thermal Sensitivity (NETD)	≤40 mK
Focal Length	13 mm
Field of View	13 mm: horizontal: 30°, vertical: 22.6°
Focus Mode	Fixed-focal
Aperture	F1.0
Digital Detail Enhancement (DDE)	Yes
Thermal Image Stabilization	Electronic Image Stabilization
AGC	Auto; manual
Noise Reduction	2D NR; 3D NR
Image Flip	90°/180°/mirror
Color Palettes	18 color modes selectable such as Whitehot/ Blackhot/Ironrow/Icefire.
Temperature Measurement Range	30°C ~+45°C
Temperature Accuracy	Max ±0.3°C with blackbody Max ±1°C without blackbody
Temperature Mode	Spot: 12 Line: 12 Area: 12 Support 12 rules simultaneously

Visible

Image Sensor	1/2.8" 2M CMOS
Effective Pixels	1920(H)x1080(V)
Electronic Shutter Speed	1/1 ~ 1/30,000s
Min. Illumination	Color: 0.002Lux; B/W: 0.0002Lux; 0Lux (IR on)
IR Distance	35m
IR On/Off Control	Auto/Manual
IR LEDs	1
Focal Length	8mm
Max Aperture	F1.9
Angle of View	H: 40° V: 22°

Audio and Video

Video Compression	H.265; H.264; H.264H; H.264B; MJPEG
Resolution	Thermal Main stream: (1280 × 1024/1024 × 768/640 × 480/256 × 192@), 1280 × 960 by default; Sub stream: (640 × 512/256 × 192@), 256 × 192 by default Visible Main stream: (1920 × 1080/1280 × 720/704 × 576@), 1920 × 1080 by default; Sub stream: (704 × 576/352 × 288@), 355 x 288 by default
Audio Compression	G.711a; G.711mu; AAC; PCM
Image Encoding Format	JPEG

General Function

Two-way Talk	Yes
Network Protocol	HTTP; TCP; ARP; RTSP; RTP; UDP; RTCP; SMTP; FTP; DHCP; DNS; DDNS; PPPOE; IPv4/ v6; SNMP; QoS; UPnP; NTP
Region of Interest (ROI)	Yes
Edge Storage	FTP; Micro SD card (256G, hot plug)
Interoperability	ONVIF; CGI; Dahua SDK
Browser	IE: IE8 and the later, and explorer with IE core Google: 42 and the earlier Firefox: 42 and the earlier Safari: 10 and the earlier
User/Host	20 channels at most (the total bandwidth 64M)
Security	Authorized username and password; attached MAC address; encrypted HTTPS; IEEE 802.1x; controlled network access
User Management	Support 20 users at most and users are classified as two groups-administrator group and user group.
Malfunction Detection	Network disconnection; IP addresses conflict; SD card error (status or storage space)

Port

Analog Video Output	1 channel of CVBS output with BNC port
Network	1 10M/100M Ethernet port (RJ-45)
Alarm Input	2 channels
Alarm Output	2 channels
Audio Input	1 channel
Audio Output	1 channel
Alarm Linkage	SD card recording/on-off output/ siren and light/email/PTZ/snapshot
Alarm Event	Motion detection/privacy mask/audio detection/SD card abnormality/network abnormality/anti-burn warning
RS-485	1 channel

Power

Power Supply	12V±20% DC, 1.2A, PoE (802.3af), ePoE

Power Consumption	Basic: 5.0W Maximum: 12W (power adapter excluded)
Environment	
Operating Temperature	10°C to +30°C
Operating Humidity	≤95%
Self-Adaptive	Auto heating to protect the chip under the cold environment
Physical Characteristics	
Protection Grade	IP67, anti-surge 6KV, anti-elctrostatic 8KV (touched by objects), anti-elctrostatic 15KV (air)
Packaging Dimensions	365 mm × 175 mm × 176 mm (14.37" × 6.89" × 6.93")
Net Weight	≤1.4 kg (3.09 lb)
Gross Weight	≤1.9 kg (4.19 lb)
Power Adaptor	Selectable
Lens	Contained
Certification	
Certifications	CE; FCC

Ordering Information

Type	Part Number	Description
DAHUA-2187	DH-TPC-BF5421P-TB13F8	(with temperature measurement function) Thermal: 400 × 300 13 mm lens
	DH-TPC-BF5421N-TB13F8	

Accessories



DH-PFA121-V2



DH-PFA151



DH-PFA152-E

Dimensions (mm [inch])

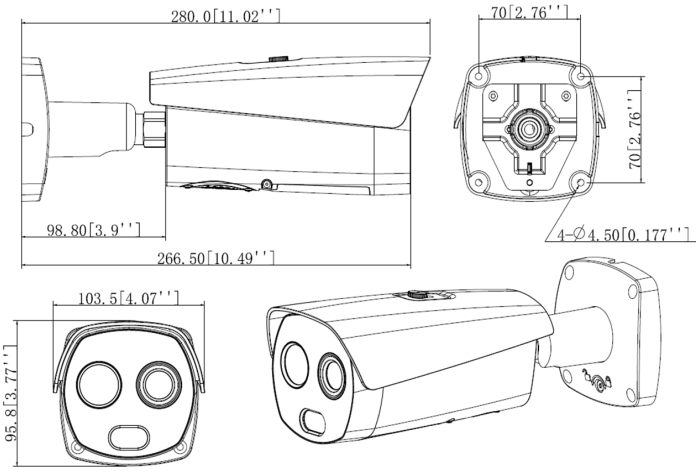

TecniTran
Telecomunicaciones
Tel. Madrid: 916 106 678 www.tecnitran.es
Tel. Valencia: 960 699 593 info@tecnitran.es
Síguenos en:

© 2019 Dahua. All rights reserved. Design and specifications are subject to change without notice.
Pictures in the document are for reference only, and the actual product shall prevail.