H5A MODULAR CAMERA

3 MP 5 MP

The Avigilon H5A Modular Camera is designed for areas with limited space or require a discreet and unobtrusive monitoring solution, such as ATMs, police interview rooms, retail checkout counters, building entrances or casino gaming tables. The camera's adjustable imager modules can easily be positioned in different orientations to help capture the most optimal view of people or scenes of interest for investigations. It comes equipped with Next-Generation Video Analytics for enhanced object detection and classification, Unusual Activity Detection, and supports Facial Recognition and Avigilon Appearance Search technologies to expedite response times for critical events.



FEATURES

NEXT-GENERATION VIDEO ANALYTICS
Detects more objects with expanded object classifications and greater accuracy for faster responses, even in crowded scenes.

H.264 AND H.265 WITH HDSM SMARTCODEC™ TECHNOLOGY
Optimizes compression levels for regions in a scene to help maximize bandwidth savings and keep internet connectivity costs down.

FIPS 140-2 COMPLIANT[2]
Brings increased data security with FIPS-compliant cryptography enabled on cameras.

ONVIF® COMPLIANT
ONVIF Profile S, T and G compliance allows easy integration with existing ONVIF infrastructures.

WIDE DYNAMIC RANGE
Captures high-quality image details in scenes with strong backlight.

FLEXIBLE INSTALLATION
Detachable cables with multiple length options are available to help reduce installation times and enable flexible positioning of the imager modules for ideal scene coverage.

DUST & WATER RESISTANCE[1]
IP66 rating for resistance from dust and water.

SMALL & DISCREET FORM FACTORS
Lightweight form factors allow for easy instllation in practically any environment, including tight spaces and discreet applications, such as behind false walls or ceilings.

CUSTOMIZABLE DESIGN
Modular design offers the ability to mix and match different resolutions and/or form factors to suit site coverage needs.

ONVIF is a trademark of Onvif, Inc.

[1]Available on Micro Bullet Imager Module only.

[2] Optional purchase of FIPS Level 1 camera license or CRYPTR microSD hardware-based encryption and key management for FIPS Level 3 support and certification.

SPECIFICATIONS - MAIN UNIT

IMAGE CONTROL AND PERFORMANCE		
Image Compression Method		H.264 HDSM SmartCodec, H.265 HDSM SmartCodec, Motion JPEG
Bandwidth Management		HDSM SmartCodec technology; Idle scene mode
Streaming		Multi-stream H.264, Multi-stream H.265, Motion JPEG
Max Image Rate (Based on combined resolution of one or two imagers)	High Frame Rate: (50 Hz/60 Hz)	(≤ 6 MP) 25 fps/30fps (8 MP) 25 fps/24 fps (10 MP) 20 fps/24 fps
	Full Feature Mode: (50 Hz/60 Hz)	(≤ 5 MP) 25 fps/30 fps (6 MP) 25 fps/24 fps (8 MP) 20 fps/20 fps (10 MP) 12.5 fps/15 fps
Dynamic Range		Up to 120 dB
Motion Detection		Pixel motion; Selectable sensitivity and threshold. Classified object detection
Tamper Detection		TBD
Electronic Shutter Control		Automatic, Manual (1/7.5 to 1/8000 sec)
Flicker Control		60 Hz, 50 Hz
White Balance		Automatic, Manual
Backlight Compensation		Adjustable
Privacy Zones		Up to 64 zones

AUXILIARY	
Audio Compression Method	G.711 PCM 8 kHz, Opus
Audio Input/Output	Line level input and output
External I/O Terminals	Alarm In, Alarm Out

NETWORK	
Network	100BASE-TX
Cabling Type	CAT5E cabling
Connector	RJ-45
Security	Password protection, HTTPS encryption, digest authentication, WS authentication, user access log, 802.1x port based authentication, FIPS 140-2 L1 (with optional camera license), FIPS 140-2 L3 (with optional accessory)
Protocols	IPv4, HTTP, HTTPS, SOAP, DNS, NTP, RTSP, RTCP, RTP, TCP, UDP, IGMP, ICMP, DHCP, Zeroconf, ARP
Streaming Protocols	RTP/UDP, RTP/UDP multicast, RTP/RTSP/TCP, RTP/RTSP/HTTP/TCP, RTP/RTSP/HTTPS/TCP, HTTP
Device Management Protocols	SNMP v2c, SNMP v3

PERIPHERALS	
Onboard Storage	2 x microSD/microSDHC/microSDXC slots - video speed class card required. Class V10 or better recommended. One of the two SD card slots is available for onboard storage.

MECHANICAL		
Dimensions (LxWxH)	Body Only	105 mm x 123 mm x 34 mm; 4.13" x 4.84" x 1.34"
	Including HD BNC Connector	114 mm x 123 mm x 34 mm; 4.50" x 4.84" x 1.34"
Weight		0.517 kg (1.14 lbs)
Body		Aluminum
Housing		Stainless steel (bracket)

MECHANICAL	
Finish	Black

ELECTRICAL	
Power Consumption	13 W Max
Power Source	VDC: 12 V +/-10%, 11.5 W min PoE: IEEE 802.3af Class 3 compliant
Power Connector	2-pin terminal block
RTC Battery Backup	3V manganese lithium

ENVIRONMENTAL	
Operating Temperature	-10 °C to +60 °C (14 °F to 140 °F)
Storage Temperature	-10 °C to +70 °C (14 °F to 158 °F)
Humidity	0 - 100% RH

CERTIFICATIONS	
Certifications/Directives	UL, cUL, CE, UKCA, ROHS, RCM
Safety	UL 62368-1, CSA 62368-1, IEC/EN 62368-1
Electromagnetic Emissions	FCC Part 15 Subpart B Class A, ICES-003 Class A, EN 55032 Class A, EN 61000-3-2, EN 61000-3-3
Electromagnetic Immunity	EN 55035, EN 61000-6-1

SPECIFICATIONS - IMAGER

IMAGE PERFORMANCE		3.0 MP	5.0 MP
Image Sensor		1/2.7" Progressive Scan	1/2.7" Progressive Scan
Imaging Area (H x V)		5.4 mm x 3.9 mm; 0.213 " x 0.154 "	
Max Image Rate		(50 Hz/60 Hz): 25 fps/30 fps	
Streaming Resolutions	Primary Stream:	Right Angle: 2128 x 1368; 1920 x 1080 Micro Bullet: 2128 x 1536; 1920 x 1080	2688 x 1944; 2128 x 1536; 2560 x 1440; 1920 x 1080
	Secondary Stream:	Right Angle: 1248 x 800; 832 x 536; 672 x 432; 528 x 336; 400 x 256; 1280 x 720; 720 x 480; 640 x 360; 512 x 288; 384 x 216 Micro Bullet: 1248 x 904; 832 x 600; 672 x 480; 528 x 384; 400 x 288; 1280 x 720; 720 x 480; 640 x 360; 512 x 288; 384 x 216	1248 x 904; 832 x 600; 672 x 480; 528 x 384; 400 x 288; 1280 x 720; 720 x 480; 640 x 360; 512 x 288; 384 x 216
Dynamic Range	WDR Off:	Up to 82 dB	
	WDR On:	Up to 120 dB	
3D Noise Reduction Filter		Yes	

LENS AND IR ILLUMINATION	RIGHT ANGLE	MICRO BULLET
Lens	3.7 mm fixed pinhole aperture	2.8 mm fixed
Minimum Illumination	TBD	
Horizontal Angle of View (HFOV)	92 °	110 °
Vertical Angle of View (VFOV)	53 °	80 °
Max Aperture	F2.5	F2.0
Control	Fixed	

IMAGE CONTROL	
Electronic Shutter Control	Automatic, Manual (1/7.5 to 1/8000 sec)
Iris Control	Fixed
Day/Night Control	Automatic, Manual

IMAGE CONTROL	
Flicker Control	60 Hz, 50 Hz
White Balance	Automatic, Manual
Backlight Compensation	Adjustable
Privacy Zones	Up to 64 zones

CONNECTOR	
Cabling Type	Coaxial cable
Connector	HD BNC

MECHANICAL		RIGHT ANGLE	MICRO BULLET
Dimensions (LxWxH)	Imager Module Body Only	45 mm x 25 mm x 20 mm; 1.77" x 0.98" x 0.79"	42 mm x 30 mm diameter; 1.65" x 1.18" diameter
	Including HD BNC Connector	54 mm x 25 mm x 20 mm; 2.13" x 0.98" x 0.79"	50 mm x 30 mm diameter; 1.97" x 1.18" diameter
Weight		0.028 kg (0.06 lbs)	0.043 kg (0.09 lbs)
Body		Aluminum	
Housing		Plastic	
Finish		Black	

ENVIRONMENTAL	RIGHT ANGLE	MICRO BULLET
Operating Temperature	-30 °C to +60 °C (-22 °F to 140 °F)	
Storage Temperature	-10 °C to +70 °C (14 °F to 158 °F)	
Humidity	0 - 100% RH	
Environmental	N/A	IP66 Rating

ANALYTICS SPECIFICATIONS

SUPPORTED RULE BASED VIDEO ANALYTIC EVENTS (PER IMAGER)	
Objects in Area	The event is triggered when the selected object type moves into the region of interest.
Object Loitering	The event is triggered when the selected object type stays within the region of interest for an extended amount of time.
Object Crossing Beam	The event is triggered when the specified number of objects have crossed the directional beam that is configured over the camera's field of view. The beam can be unidirectional or bidirectional.
Object Appears or Enters Area	The event is triggered by each object that enters the region of interest. This event can be used to count objects.
Object Not Present in Area	This event is triggered when no objects are present in the region of interest.
Objects Enter Area	The event is triggered when the specified number of objects have left the region of interest.
Objects Leave Area	The event is triggered when the specified number of objects have left the region of interest.
Object Stops in Area	The event is triggered when an object in a region of interest stops moving for the specified threshold time.
Direction Violated	The event is triggered when an object movies in the prohibited direction of travel.
Tamper Detection	The event is triggered when the scene unexpectedly changes.

SUPPORTED CLASSIFIED OBJECT TYPES	
Object Types in Outdoor Mode	Vehicle, sub-types: Car, Truck, Bicycle, Motorcycle, Bus Person
Object Types in Indoor Mode	Person

TEACH BY EXAMPLE	
Teach By Example	Yes, when used with Avigilon Control Center™

AVIGILON CONTROL CENTER (ACC) VERSIONS SUPPORTED FEATURES*	
ACC Version 6.14.26 or higher	All supported analytic events with two types of classified objects: person or vehicle. Appearance search when paired with appropriate server hardware. H.265 supported.
ACC Version 7.14.6 or higher	All supported analytic events with people and vehicles and all vehicle sub-types as classified objects. Appearance search when paired with appropriate server hardware. H.265 supported.

*Indoor Close-up analytic mode is only supported on ACC 7.14.12 and later.

OUTLINE DIMENSIONS

[X.X]	INCHES
X	MM

MAIN UNIT WITH BRACKET

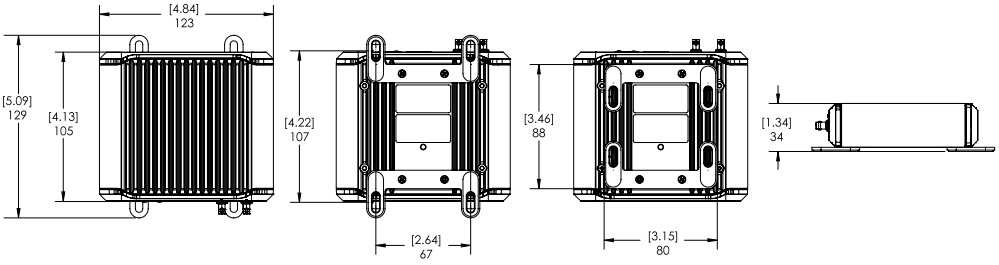

MAIN UNIT WITH DIN RAIL MOUNT (OPTIONAL)

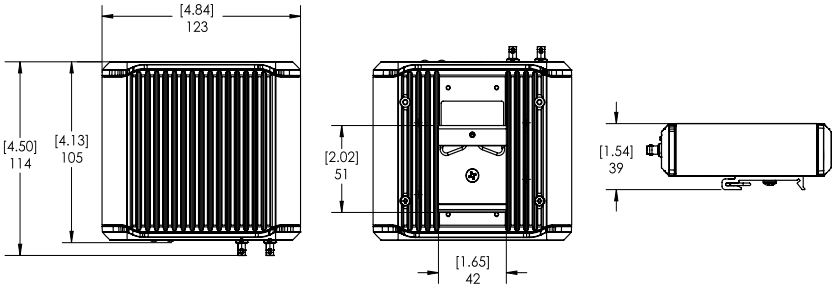

MICRO BULLET IMAGER WITH BRACKET

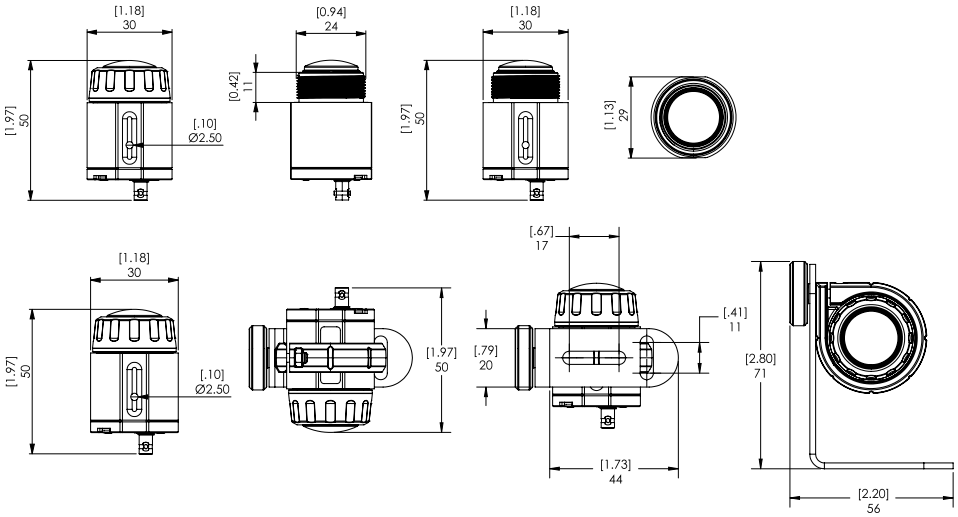

MICRO BULLET IMAGER WITH SIDE RAIL MOUNT

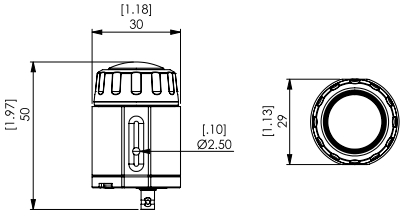

MICRO BULLET IMAGER WITH MIN. CABLE LENGTH

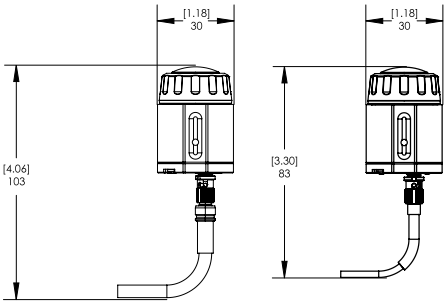

IP CONNECTOR NON-IP CONNECTOR

RIGHT ANGLE IMAGER WITH BRACKET

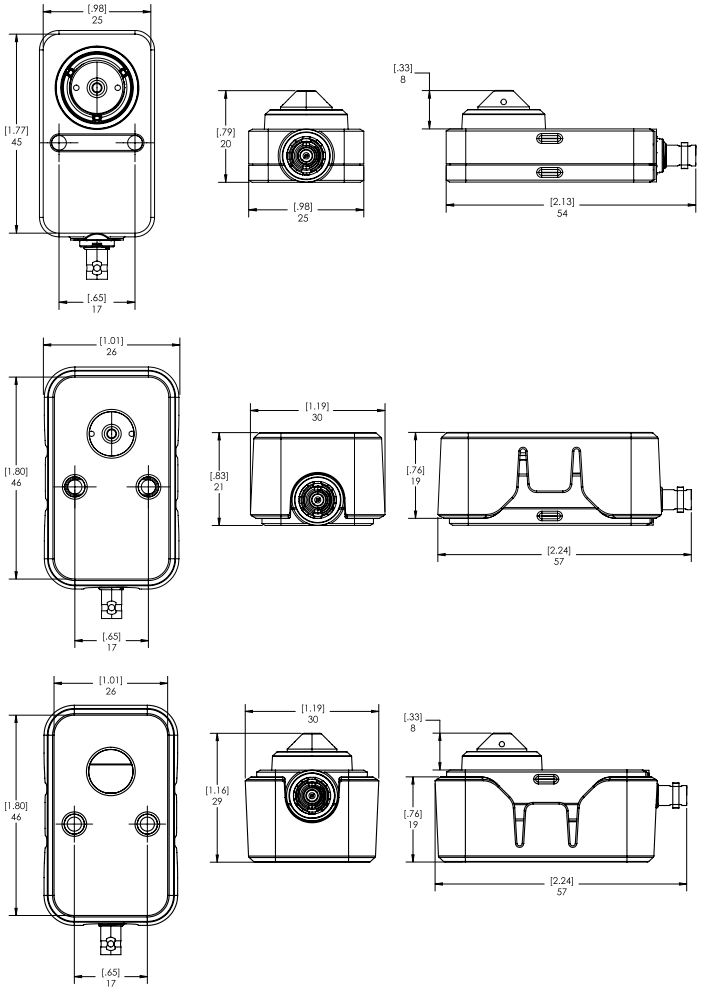

RIGHT ANGLE IMAGER WITH MIN. CABLE LENGTH

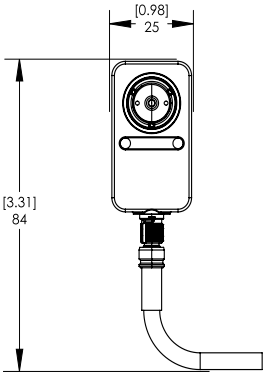

ORDERING INFORMATION

The variety of mounting options for the H5A Modular provides maximum flexibility to combine different imager modules and cable configurations.

MAIN UNIT	IMAGER MODULES	REQUIRED ACCESSORIES
 H5A Modular Camera Main Unit (H5A-MOD-2P)	Order up to two imager modules per Main Unit, any combination of the following:  H5A Right Angle Imager (3C-H5MOD-RP4)  H5A Micro Bullet Imager (xC-H5MOD-MB2)	Order one cable for each imager module: • CBL2M-1001 (2 m)

IMAGER MODULES

With the modular design of the H5A Modular, either camera module can be connected to the H5A Modular Camera Main Unit for maximum versatility and optimal installation.

	FORM FACTOR	MP	WDR	ANALYTICS	LENS	IP66	HDSM SMARTCODEC	LIGHTCATCHER TECHNOLOGY
3C-H5MOD-RP4	Right Angle	3.0	✓	✓	3.7 mm, Fixed Pinhole		✓	✓
3C-H5MOD-MB2	Micro Bullet	3.0	✓	✓	2.8 mm, Fixed	✓	✓	✓
5C-H5MOD-MB2	Micro Bullet	5.0	✓	✓	2.8 mm, Fixed	✓	✓	✓

CAMERA MAIN UNIT

DISPLAY PART NUMBER	DESCRIPTION
H5A-MOD-2P	H5A Modular Camera Main Unit

CAMERA CABLES

DISPLAY PART NUMBER	DESCRIPTION
CBL2M-1001	2 m (6 ft) HD BNC Cable for H5A Modular Camera Imager

OPTIONAL MOUNTING ADAPTERS

DISPLAY PART NUMBER	DESCRIPTION
BRKTMD-1001	Din rail mount for H5A Modular Camera Main Unit
BRKTMD-1101	Replacement L Bracket for Micro Bullet Imager H5A Modular
BRKTMD-1021	Replacement Flat Bracket for Right Angle Imager H5A Modular
BRKTMD-1031	Replacement Trimring Bracket for Micro Bullet Imager H5A Modular

OPTIONAL LICENSES AND ACCESSORIES

DISPLAY PART NUMBER	DESCRIPTION
CAM-FIPS	Camera license to enable FIPS Level 1 cryptographic mode on any H5A camera
CAM-FIPS-CRYPTR-L3	MSI CRYPTR SD with camera license to enable FIPS Level 3 cryptographic mode on H5A cameras

Tecnitrān
TELECOMUNICACIONES

Tel. Madrid: 916 106 678
Tel. Valencia: 960 699 593
Tel. Mallorca: 871 620 033

www.tecnitran.es
info@tecnitran.es

Síguenos en:

MOTOROLA SOLUTIONS

AVIGILON™

Jan 2022 | Rev 1

© 2022, Motorola Solutions, Inc. All rights reserved. MOTOROLA, MOTO, MOTOROLA SOLUTIONS, and the Stylized M Logo are trademarks or registered trademarks of Motorola Trademark Holdings, LLC and are used under license. AVIGILON, the AVIGILON logo, AVIGILON CONTROL CENTER, ACC, HDSM SmartCodec and LIGHTCATCHER are trademarks of Avigilon Corporation. The absence of the symbols ™ and ® in proximity to each trademark in this document or at all is not a disclaimer of ownership of the related trademark. All other trademarks are the property of their respective owners.